EXPERIMENT No 15:

Programming a 4WD Robot Using L293D Motor Shield and Adafruit Library in Mixly

Student Guide

Prepared by BLIS GLOBAL Robotics Department

Copyright @2024

Objective:

In this experiment, you will learn how to program a 4-wheel drive (4WD) robot to move forward, backward, left, and right using an L293D motor shield (with M1, M2, M3, and M4 motor connections) and the Adafruit Motor Shield Library in Mixly.

Materials Needed:

- 1 Arduino Uno
- 1 L293D Motor Shield (with M1, M2, M3, and M4 motor connections)
- 4 DC Motors (connected to 4 wheels)
- Jumper wires
- Battery pack (to power the motors)
- USB Cable (for programming the Arduino)
- Computer with Mixly software and the Adafruit Motor Shield library installed

---

What is the L293D Motor Shield?

The L293D motor shield allows you to control up to 4 motors using the Arduino. It simplifies the connections and control for each motor and provides the ability to power multiple motors simultaneously. The motor shield connects motors to specific pins (M1, M2, M3, M4) and uses the Adafruit Motor Shield Library to control them programmatically.

Steps to Program the 4WD Robot Using the L293D Motor Shield

Step 1: Hardware Setup

1. Attach the L293D Motor Shield to the Arduino Uno:
   - Place the motor shield on top of the Arduino Uno so that all the pins align.
2. Connect the Motors to the Motor Shield:
   - Connect the two front motors to the M1 and M2 terminals of the motor shield.

- Connect the two back motors to the M3 and M4 terminals of the motor shield.

3.Power Connections:

- Connect the battery pack to the external power input of the motor shield to power the motors.

Schematics Diagram:

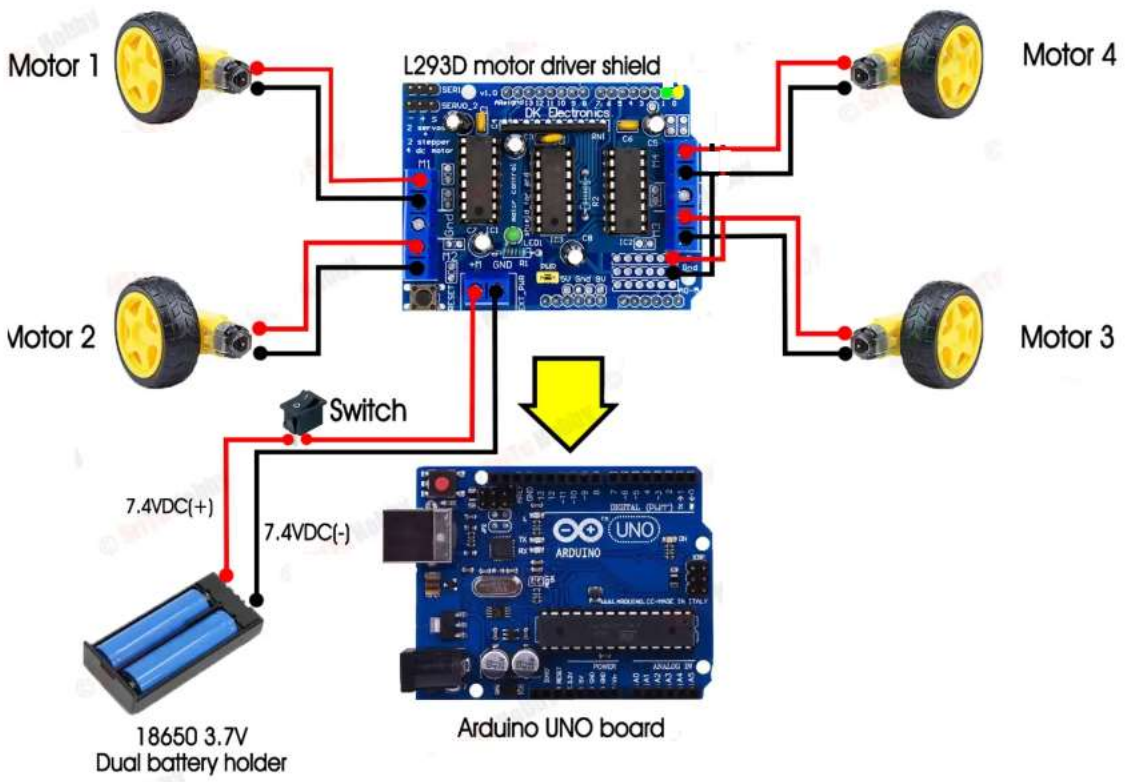

Step 2: Install the Adafruit Motor Shield Library

Before programming in Mixly, ensure the Adafruit Motor Shield Library is installed in Mixly. You can download it from the Arduino Library Manager.

1. **Open Mixly:**
   - Launch Mixly on your computer and select the Arduino Uno as your board.
2. **Install the Adafruit Motor Shield Library:**
   - Ensure that the Adafruit Motor Shield library is included in Mixly's available blocks. If not, add the library manually.

Step 3: Create the Program Using Mixly Blocks

To control the robot's movements, you will use the Adafruit motor shield commands in Mixly. Follow the steps to create movement commands:

1. **Import the Adafruit Motor Shield Library:**
   - Use the import library block in Mixly and select the Adafruit Motor Shield.
2. **Initialize the Motors:**
   - Initialize Motor 1 (M1) for the front left motor, Motor 2 (M2) for the front right motor, Motor 3 (M3) for the back left motor, and Motor 4 (M4) for the back right motor.
   - Set the motors to control direction and speed using the appropriate Mixly blocks.

Program Movements

1. Forward Movement:

- Set M1 and M3 to run forward (for the left motors).
- Set M2 and M4 to run forward (for the right motors).
- Add a delay block to specify how long the robot will move forward (e.g., 2000 milliseconds for 2 seconds).

2. Backward Movement:

- Set M1 and M3 to run backward (for the left motors).
- Set M2 and M4 to run backward (for the right motors).
- Add a delay block for the robot to move backward.

3. **Turn Left:**
   - Set M1 and M3 to stop or run backward.
   - Set M2 and M4 to run forward.
   - Add a delay block to control the turning duration.
4. **Turn Right:**
   - Set M1 and M3 to run forward.
   - Set M2 and M4 to stop or run backward.
   - Add a delay block to control the turning duration.

Step 4: Build the Program in Mixly

1. **Forward Command:**
   - Drag the "Motor Forward" block from the motor control section and set M1 and M3 (left motors) to run forward.
   - Set M2 and M4 (right motors) to run forward.

- Add a "Delay" block to move the robot forward for a specified time (e.g., 2000 milliseconds for 2 seconds).

2. **Backward Command:**
    - Drag the "Motor Backward" block and set M1 and M3 (left motors) to run backward.
    - Set M2 and M4 (right motors) to run backward.
    - Add a "Delay" block to move backward for a specified time.
3. **Turn Left Command:**
    - Set M1 and M3 to stop.
    - Set M2 and M4 to run forward.
    - Add a delay block to control the turning duration.

4. **Turn Right Command:**
   - Set M1 and M3 to run forward.
   - Set M2 and M4 to stop.
   - Add a delay block to control the turning duration.

5. **Loop the Program:**
   - Add a "Forever" loop from the control section to continuously execute the robot's movement commands.

Step 5: Upload the Program to the Arduino

1. **Check the Connections:**
   - Ensure that all motors and power connections are correct.
2. **Upload the Code:**
   - Once the block-based program is complete, click the Upload button in Mixly.

- Wait for the program to compile and upload to the Arduino.

Step 6: Test the 4WD Robot

- After uploading the program, your 4WD robot should be able to:
  - Move forward when the forward block is executed.
  - Move backward when the backward block is executed.
  - Turn left when the left turn block is executed.
  - Turn right when the right turn block is executed.

Conclusion:

In this experiment, you successfully programmed a 4WD robot to move forward, backward, left, and right using Mixly and the Adafruit Motor Shield library with the L293D motor shield. This exercise helps you

understand how to control multiple motors and how to program a robot for different directional movements.

Challenge:

- Adjust the delays to control how long the robot moves in each direction.
- Add more complex movements, such as combining forward and turn commands to make the robot follow a specific path.

This experiment introduces you to motor control and directional movement programming for a 4WD robot using Mixly and the L293D motor shield.